MG52/MG52E Installation Guide

About this Guide

This guide provides instructions on how to install and configure your MG52/52E series device. This guide also provides mounting instructions and limited troubleshooting procedures. For more MX device installation guides, refer to the MX installation guides section on our documentation website.

Product Overview

Connectivity is critical for any organization that depends on reliable internet access in order to function. Wireless WAN connectivity options, such as cellular networks, serve as a reliable backup internet uplink in the event of a primary uplink failure.

The gigabit-capable MG52/52E cellular gateway simplifies the path to wireless WAN connectivity and makes cellular a viable uplink option for many networks. The MG52/52E acts as a gateway to cellular networks by converting 5G and LTE signals from a cellular provider to an Ethernet handoff, which can be used as an internet uplink for a variety of use cases.

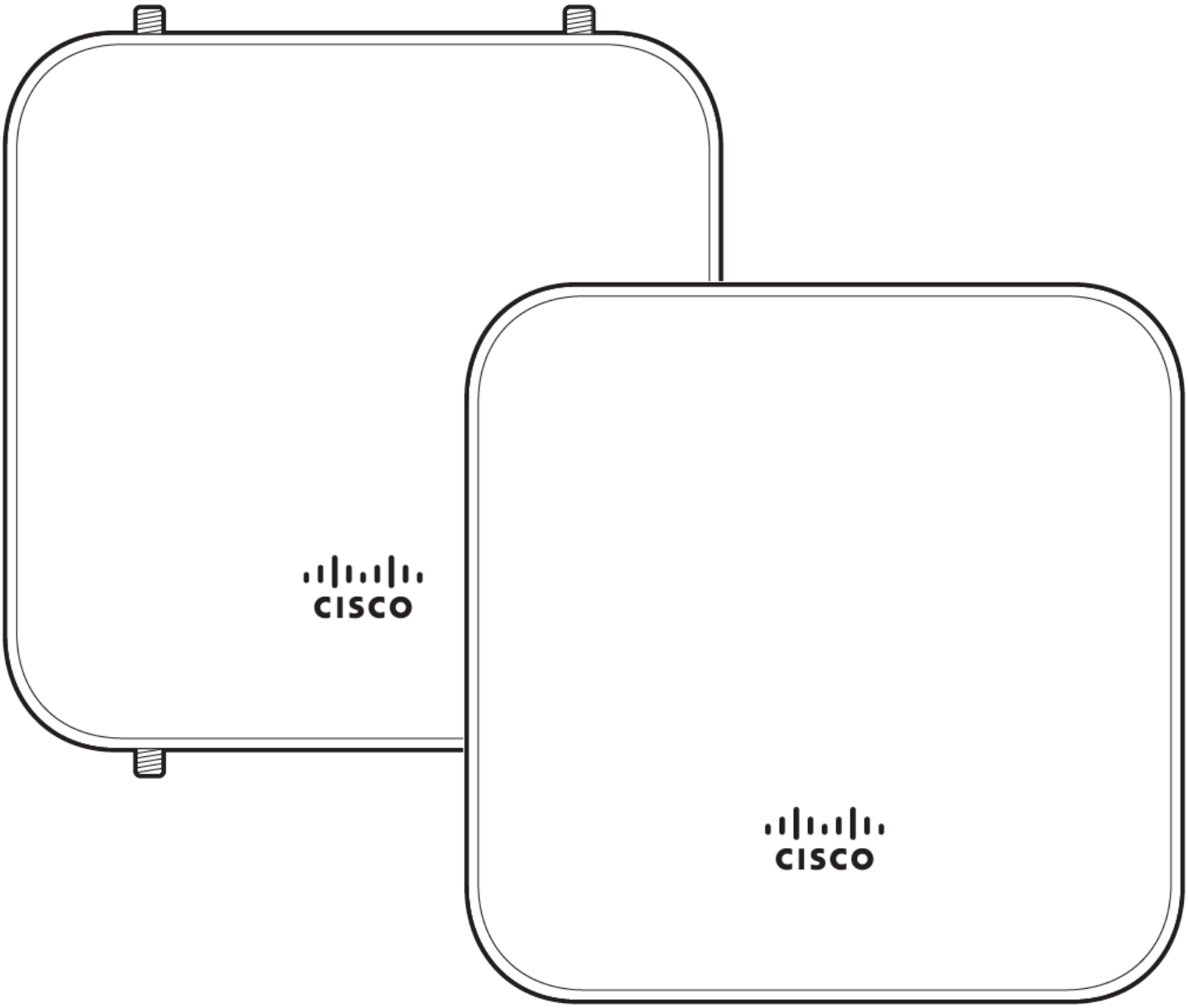

MG52-HW Product View and Physical Features

Front Panel

Back Panel

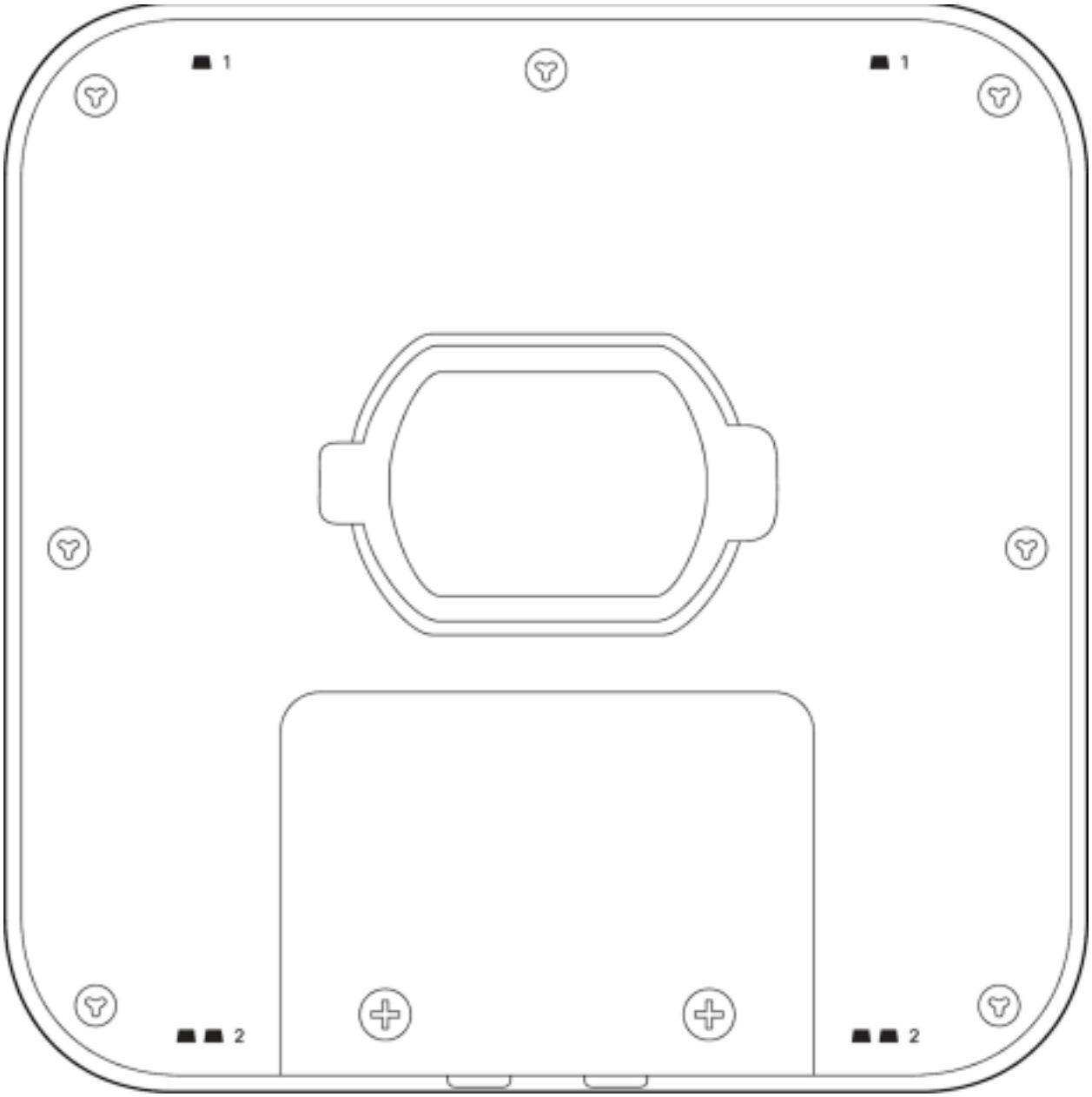

Side Panels

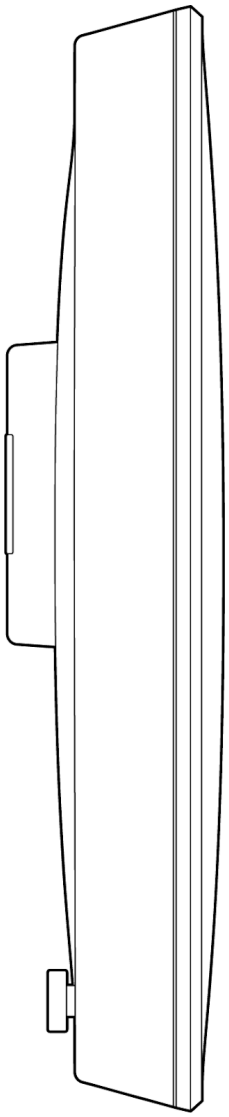

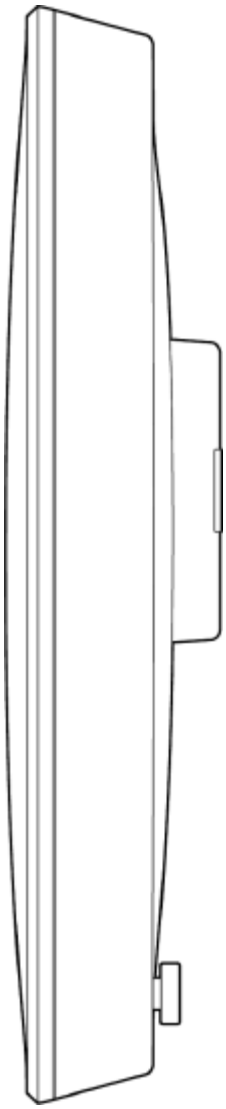

MG52E-HW Product View and Physical Features

Front Panel

Back Panel

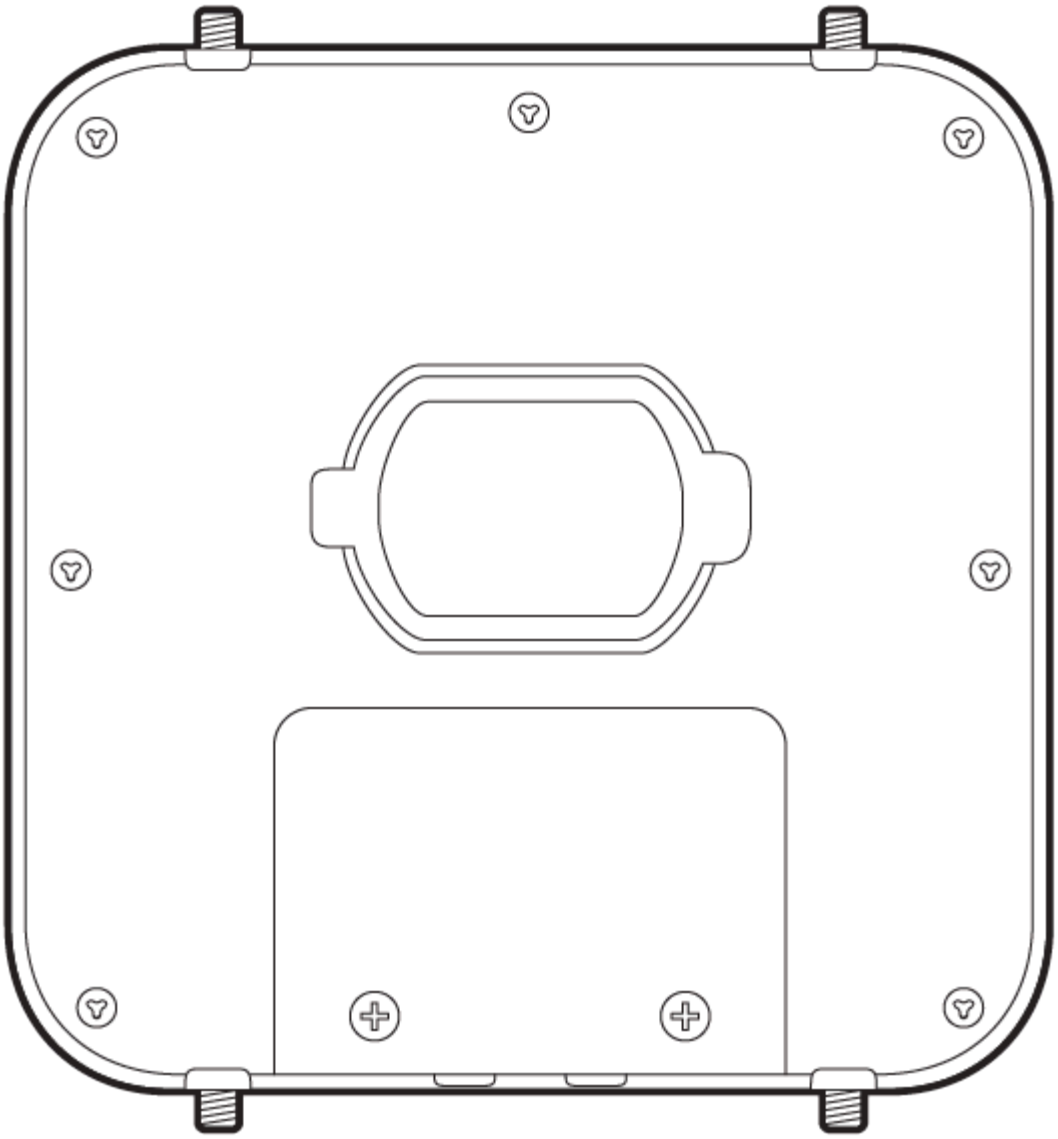

Top & Bottom View

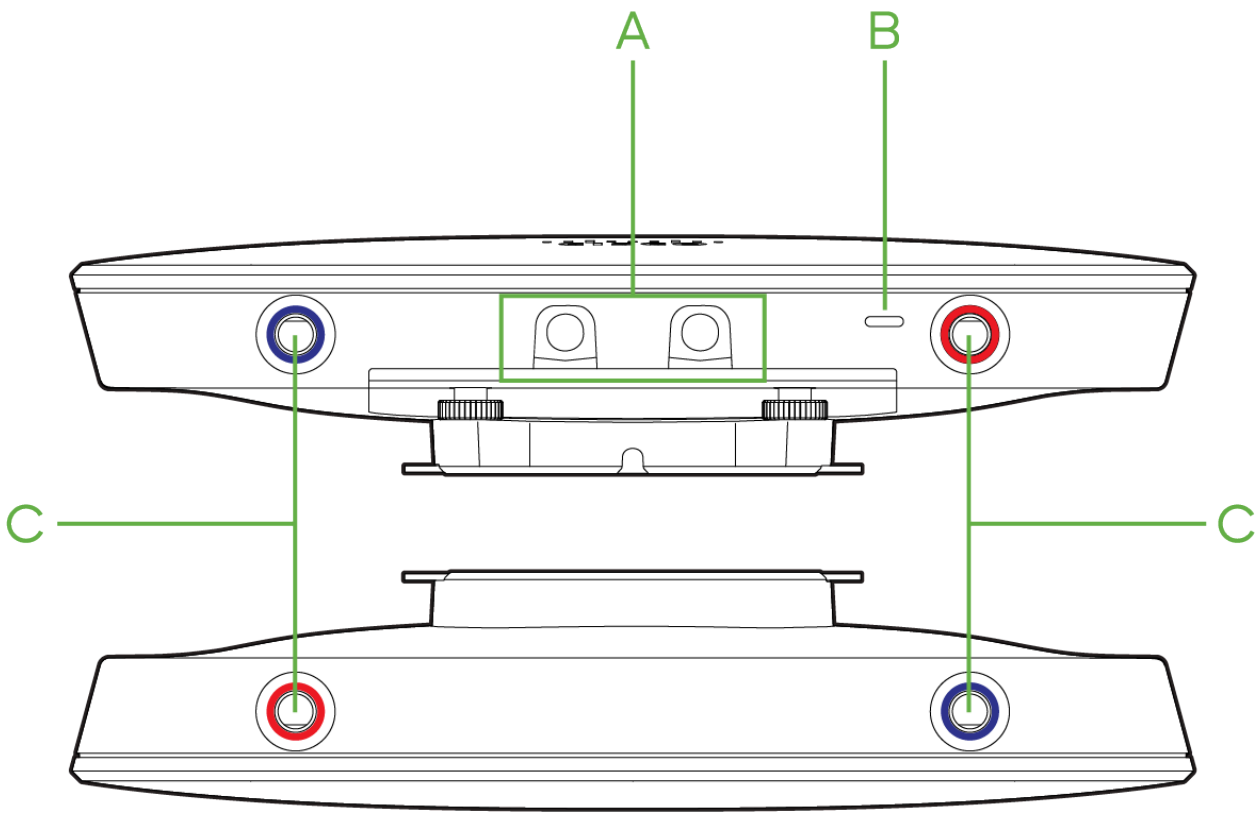

A- Weather Resistance Cable Seal
B- LED light
C- Antenna Connectors

Status Indicator

The MG series of devices use an LED to inform the user of the device's status. LED patterns and their meanings are described below.

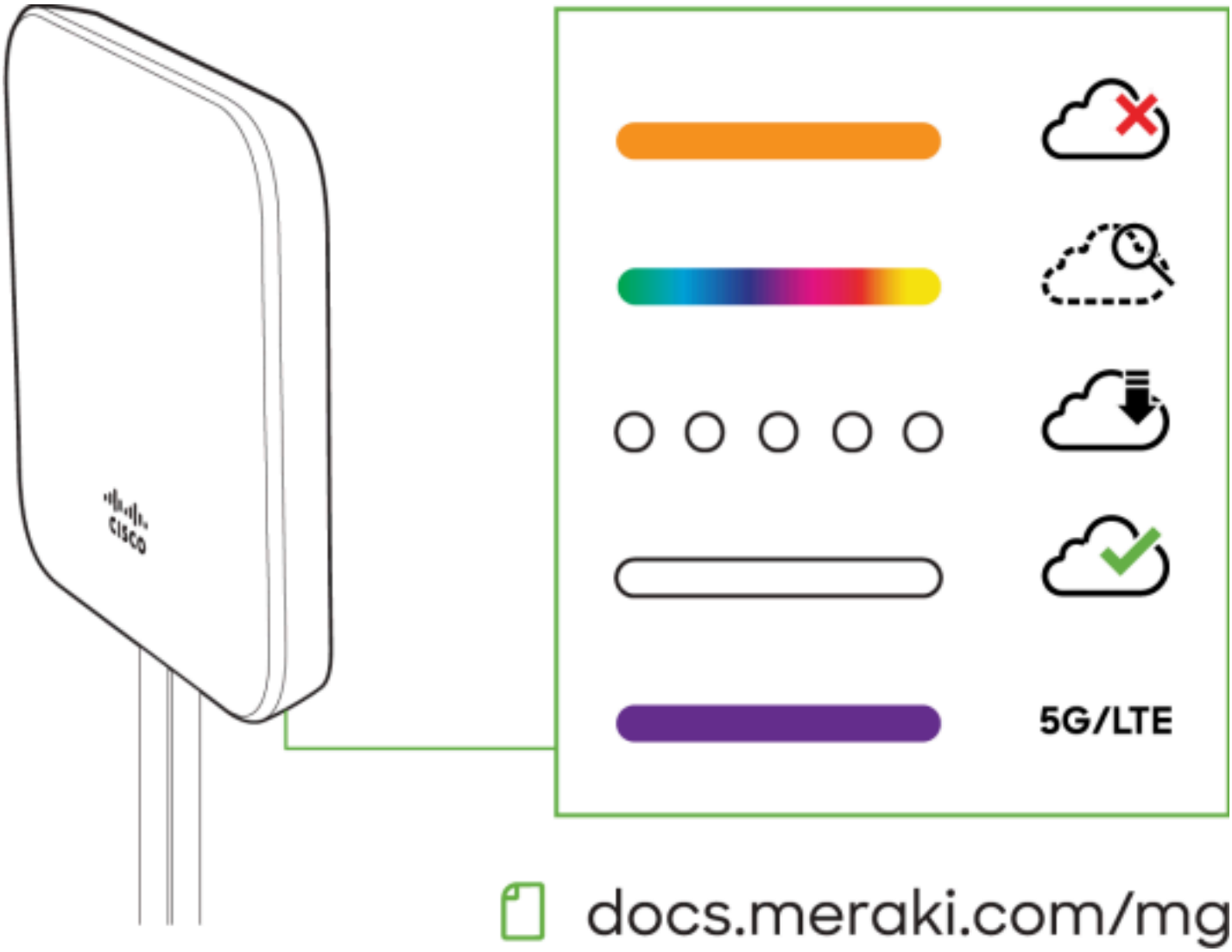

LED Status Meaning

- Solid orange Power is applied but the appliance is not connected to the Meraki Dashboard
- Rainbow Colors The appliance is attempting to connect to Meraki Dashboard
- Flashing White Firmware upgrade in progress
- Solid White Fully operational/connected to LAN
- Solid Purple Fully operational/connected to cellular network

Ethernet Port

The MG52/52E features two Ethernet ports. Port 1 can be reconfigured to Wired WAN Mode for troubleshooting and diagnostics. Brand new units will ship with both ports configured as LAN, which is the default, normal operating mode.

The port labeled “PoE” (Port 1 & 2) accepts 802.3at power.

AC Adapter Power Port

In the event that the MG cannot be powered by POE, the MG has an AC adapter port that can be used to power it up with the 30 Watt (12V 2.5A) AC adapter (sold separately).

Factory Reset

To reset an MG cellular gateway to the factory defaults, press the button labeled 'Reset' on the back panel of the appliance for at least 10 seconds. This will clear all the local configuration settings done via the local status page. Please be aware that after resetting the unit, the local status page requires reconfiguration, and the device will need to download its latest configuration from the dashboard cloud. Please be patient as this could take up to 5 - 10 minutes.

Package Contents

Model	Contents
MG52	1x MG52-HW 1x Mounting plate
MG52E	1x MG52E-HW 1x Mounting plate 4x dipole antennas

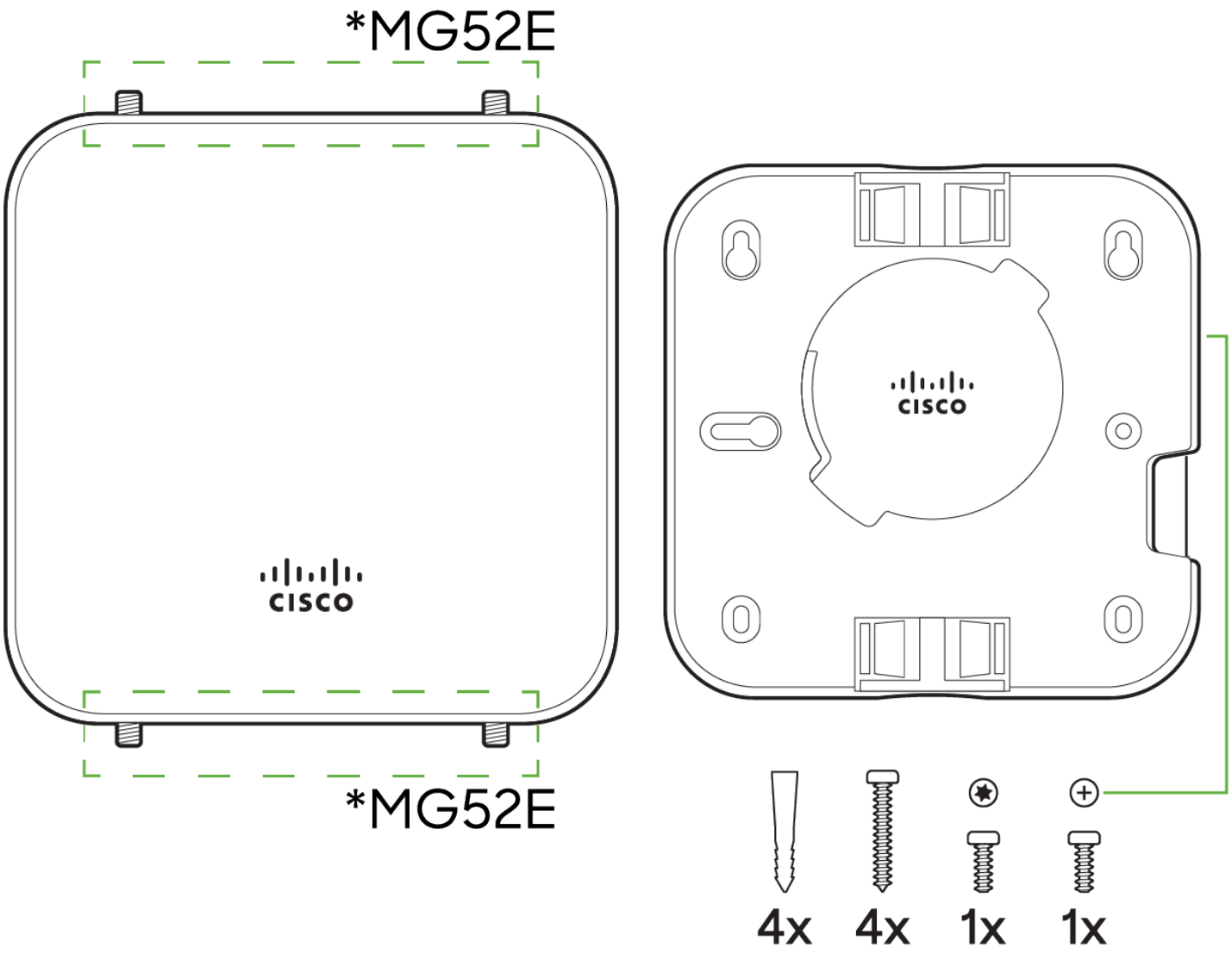

Note: The RF Connectors on the MG52E is an RP-SMA that is designed to support the official MG dipole antennas and patch antenna. Usage of non-Meraki accessories is not supported and may damage the MG and degrade performance. The Cisco Meraki antennas are designed for the maximum allowable gain without exceeding the EIRP for local regulatory domains on their supported bands.

Safety and Warnings

These operations are to be taken with respect to all local laws. Please take the following into consideration for safe operation: • Power off the unit before you begin. Read the installation instructions before connecting the system to a power source.

- Before you work on any equipment, be aware of the hazards involved with electrical circuitry and be familiar with standard practices for preventing accidents.
- Read the mounting instructions carefully before beginning installation. Failure to use the correct hardware or to follow the correct procedures could result in a hazardous situation to people and damage to the system.
- This product relies on the building's installation for short-circuit (over current) protection. Ensure that the protective device is rated not greater than: 15 A, 125 Vac, or 10A, 240 Vac.

- Please only power the device with the provided power cables to ensure regulatory compliance.

Pre-install Preparation

You should complete the following steps before going on-site to perform an installation.

Antenna Installation

The MG52E comes with two sets of Dipole antennas that are specially designed to match their respective connectors for optimal performance. Unlike the antennas included with other MG models, these are color-coded (Red and Blue), making it easy to pair each antenna with the correct connector. Simply match the color on the antenna with one of the corresponding connectors to ensure the best performance.

Configure the Dashboard Network

The following is a brief overview only of the steps required to add an MG52/52E to your network. For detailed instructions about creating, configuring and managing Meraki networks, refer to our online documentation portal.

1. Login to http://dashboard.meraki.com and select the intended organization. If this is your first time using the Meraki dashboard, create a new account.
2. Claim the device to your organization inventory. You will need your Meraki order number (found on your invoice) or the serial number of each MG, which looks like **Qxxx-xxxx-xxxx**, and is found on the bottom of the unit. You will also need to claim your Enterprise license key, which you should have received via email.
3. Find or create the network to which you plan to add your MG52/52E.
4. Add your MG52/52E to the network.

Check and Set Firmware

To ensure your MG52/52E performs optimally immediately following installation, it is recommended that you facilitate a firmware upgrade prior to using your MG52/52E.

1. Insert an active nano (4FF) SIM card/cards into the SIM trays before powering up the device.
2. Connect your MG52/52E to power.
3. The MG52/52E will turn on and the power LED will glow solid orange until it comes online.
4. If the unit requires a firmware upgrade after coming online, the power LED will begin blinking white until the upgrade is complete, at which point the LED will turn solid white or purple. You should allow at least a few minutes for the firmware upgrade to complete, depending on the speed of your internet connection.

Check and Configure Upstream Firewall Settings

If you are testing Wired WAN Mode on port 1 and have an upstream firewall in place, the firewall must allow outgoing connections on particular ports to specific IP addresses. The most current list of outbound ports and IP addresses for your organization can be found on the **Help > Firewall Information** page in your dashboard.

Collect Tools

You will need the following tools to perform an installation:

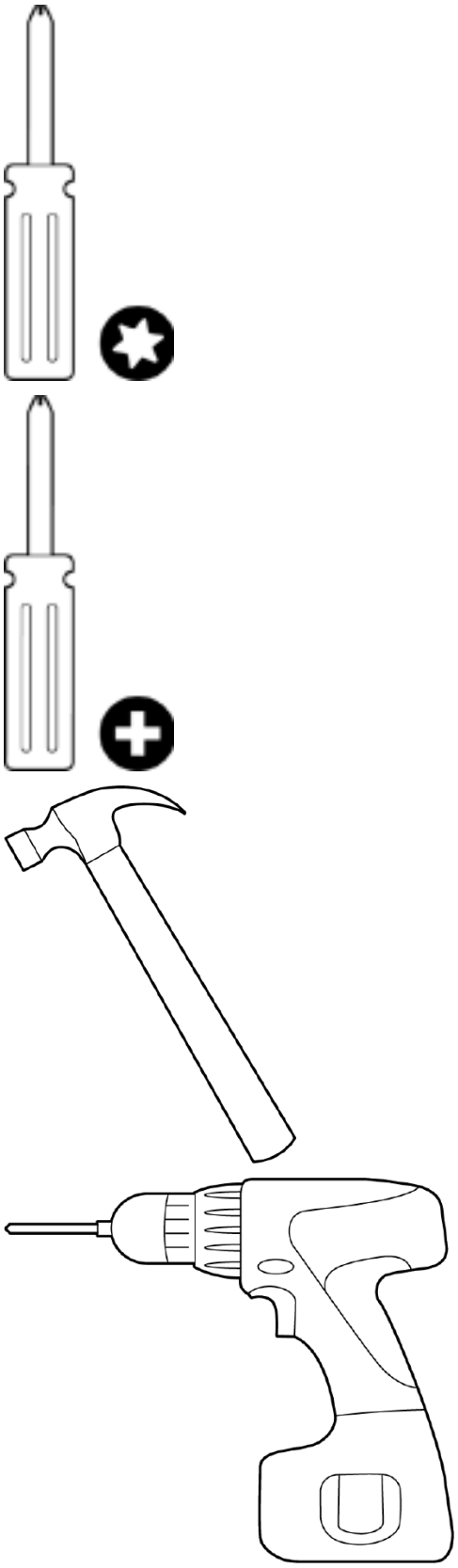

T8 Torx screwdriver, Phillips screwdriver, Hammer, Drill with 1/4" (6.3mm) bits

Collect Additional Hardware for Installation

You will need the following hardware to perform an installation:

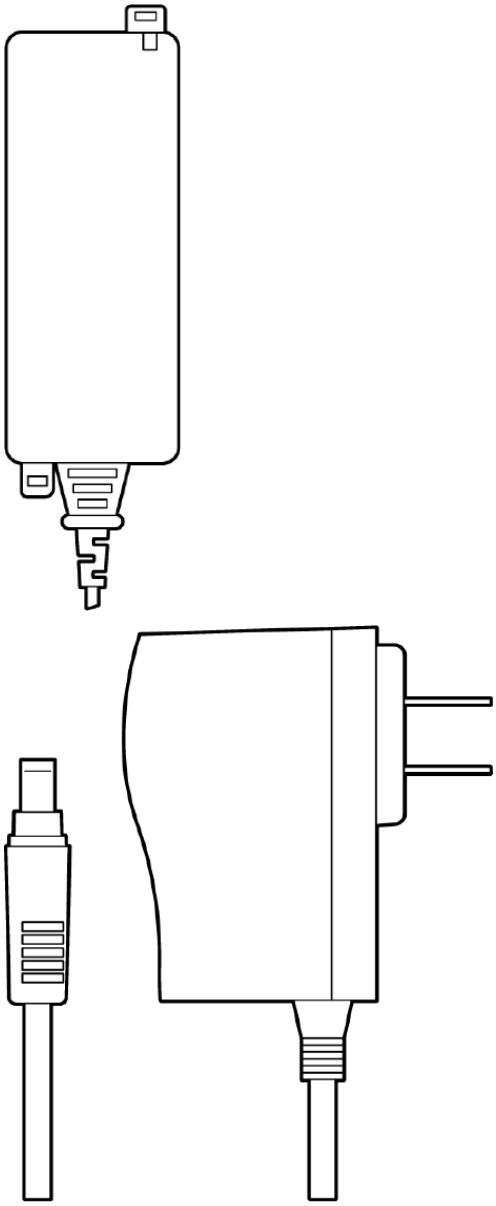

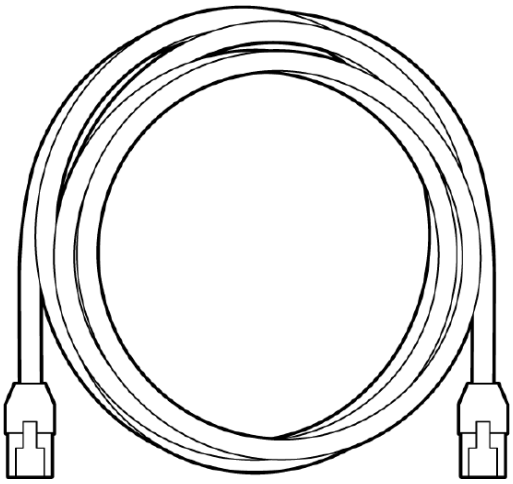

802.3at PoE source (either PoE switch or Meraki 802.3at PoE injector), AC adapter, Network cables RJ45 connectors long enough for your particular mounting location

Installation Instructions

Mounting Hardware

The supplied wall screws and anchors allow you to mount the appliance on a drywall surface, either vertically or horizontally. For mounting on drywall, use a ¼-inch drill bit, then insert the plastic and screw assemblies.

- For mounting on wood or a similar surface, use only the screws.
- Allow the heads of the screws to stick out far enough to be inserted securely into the back of the MG.

Plan Ahead: When mounting the MG cellular gateway in hard to reach areas, it is recommended that Ethernet cables are run to both ports as a redundant method to access both ports in the case of physical failure of a port or cable.

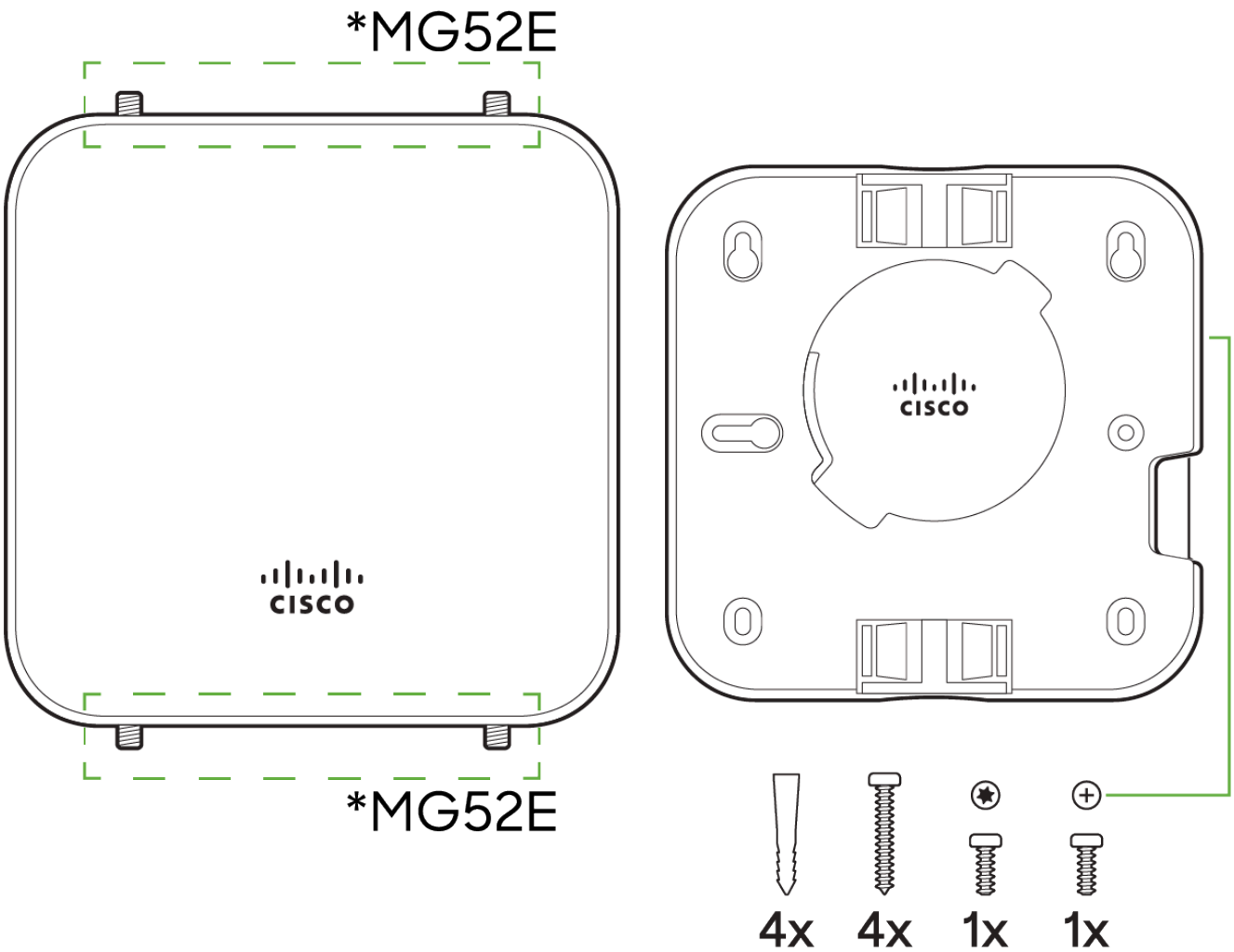
*MG52E
CISCO
*MG52E
CISCO
4x
4x
1x
1x

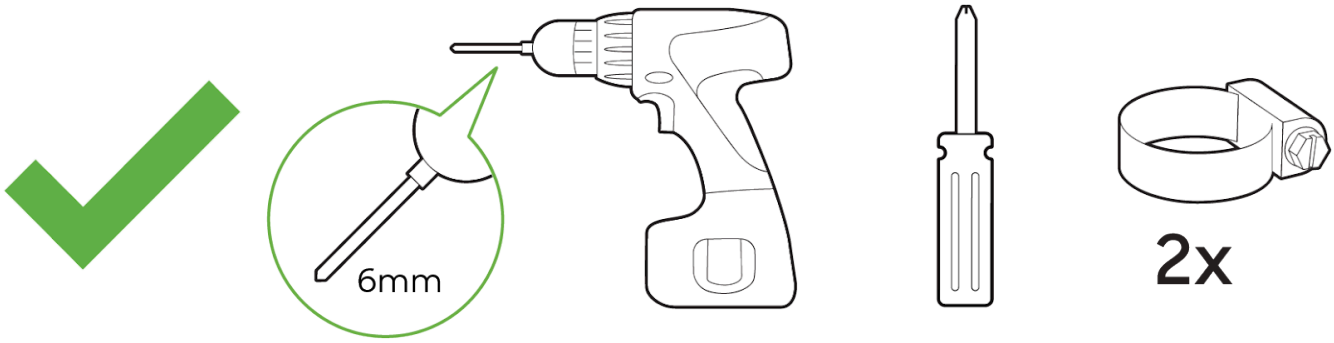
6mm
2x

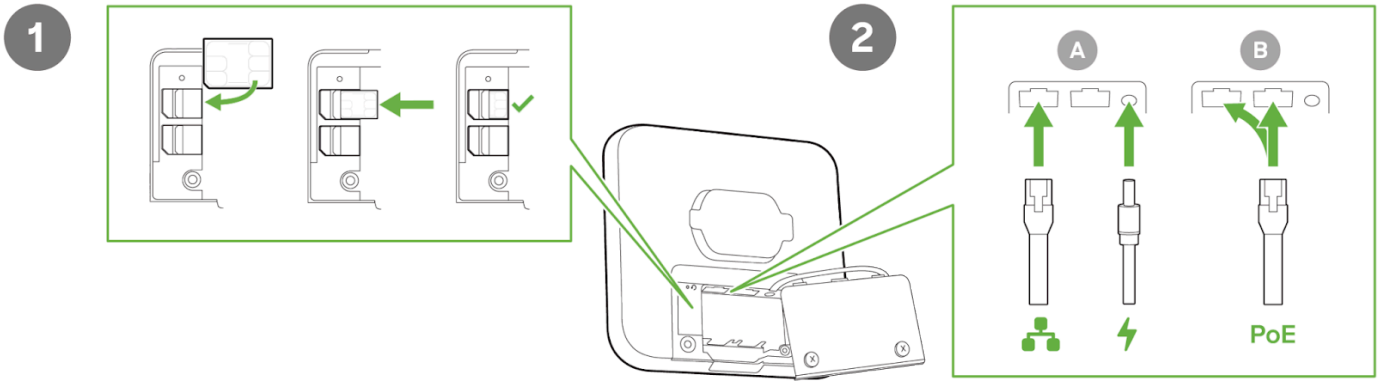
1
2
A
B
PoE

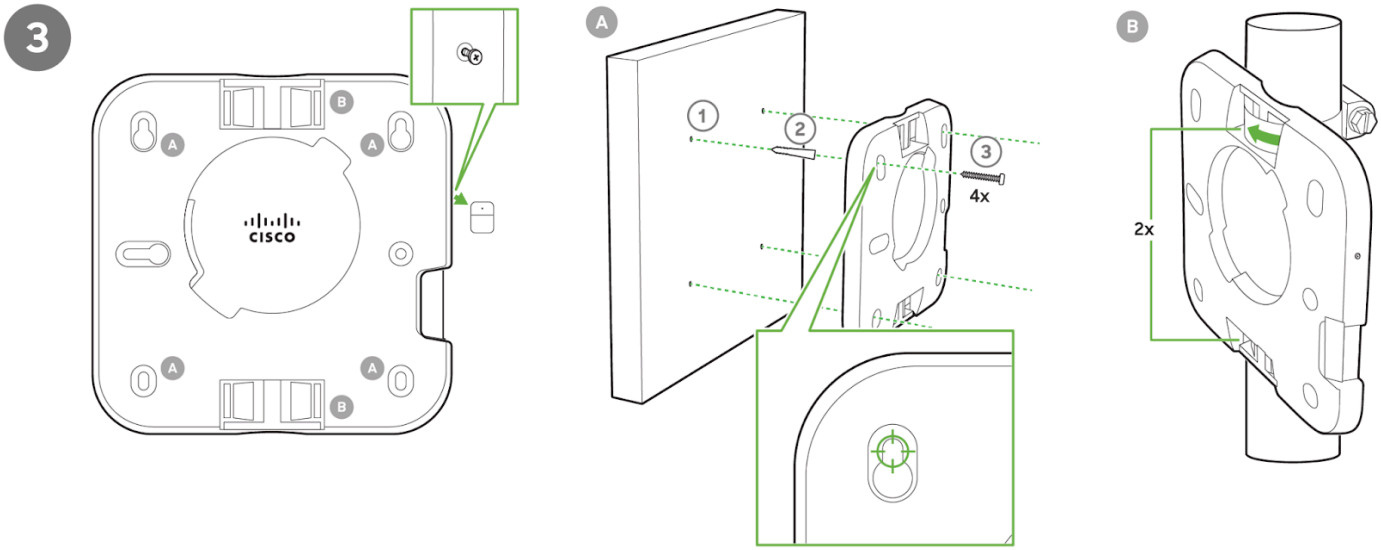
3
A
B
cisco
1
2
3
4x
2x

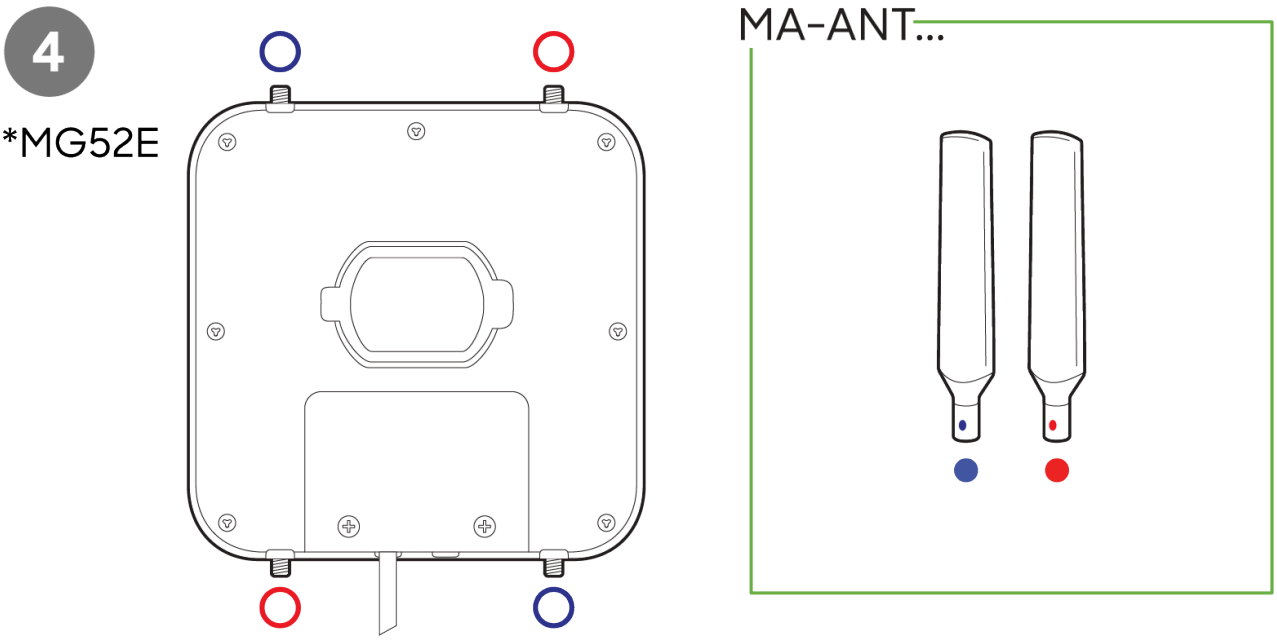
4
*MG52E
MA-ANT...

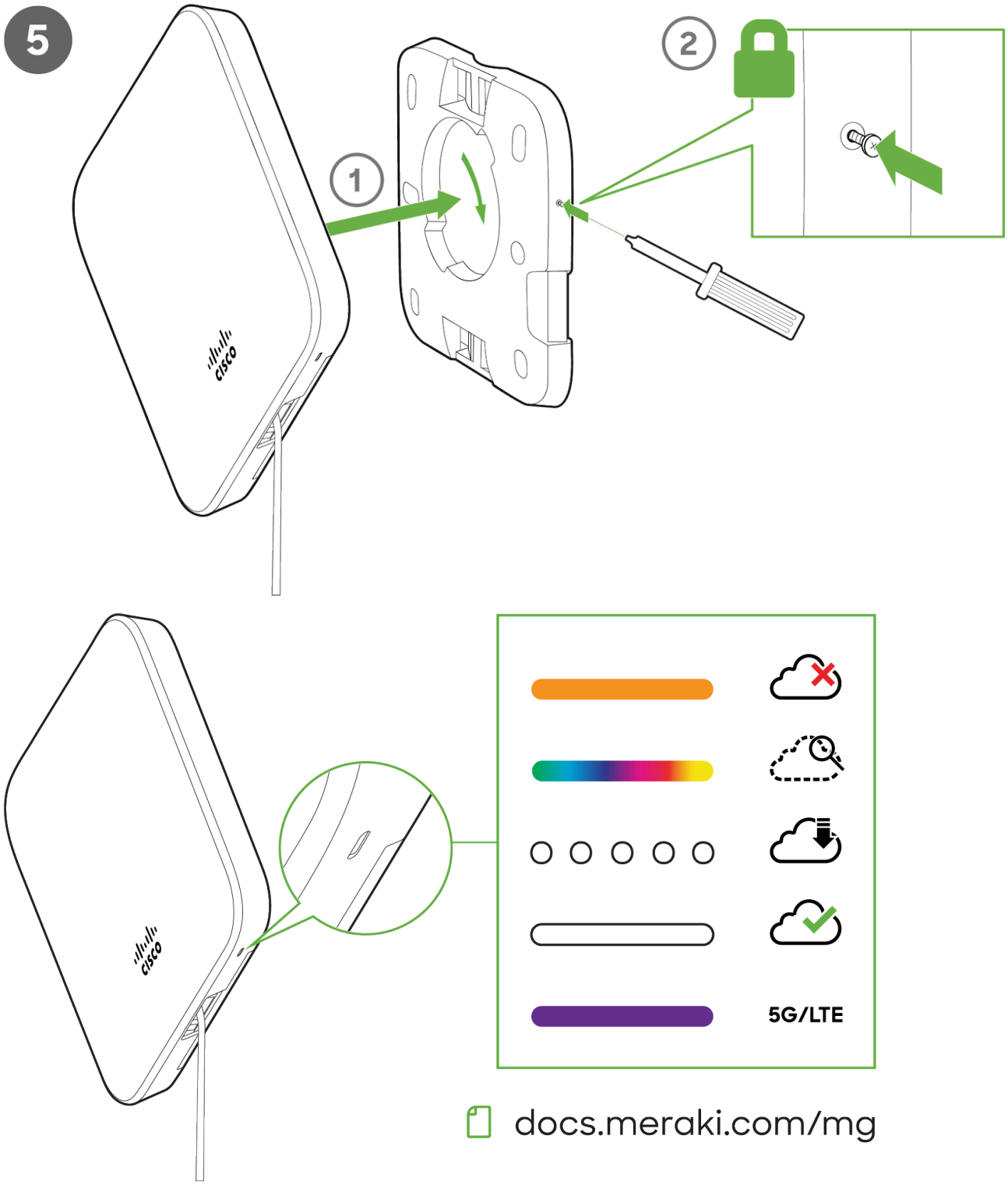

Connecting to WAN

All Meraki MG devices must have an IP address. This section describes how to configure the WAN interface before you deploy it. A local management web

service running on the appliance is accessed through a browser running on a client PC. This web service is used for configuring and monitoring basic ISP/WAN connectivity.

> **Note:** All the settings below are accessible only via the local status page.

Setting up Cellular Connection

> **Warning:** To ensure that the client PC is redirected to the local web service in the following steps, you must disable all other network services (ex: wi-fi) on your client machine.

Follow the steps below to configure basic connectivity and other cellular gateway parameters on the MG52/52E:

1. Using a client machine such as a laptop, connect directly to LAN interface of the MG.
2. Find the client's IP address and default gateway. Using a browser on the client machine, access the appliance's built-in web service by browsing to mg.meraki.com or the default gateway IP (You do not have to be connected to the Internet to reach this address).
3. Click the Configuration tab under the Local Status tab. The default credentials are the Serial Number of the device (all upper-case *with* dashes) as the username and a blank password field.
4. Configure additional bearer values like APN if required by your carrier under the Configuration tab.

Configuring Ethernet Ports

To configure physical link settings on the Ethernet ports, click on Ethernet tab. You can enable half duplex, full duplex, and auto-negotiation, as well as set 10 or 100 or 1000-Mbps data rates on Ethernet ports.

Grounding and Surge Protections

Grounding of Outdoor Mounted MG's

It is strongly recommended that all outdoor mounting installations be properly grounded to ensure effective dissipation of high-voltage discharge events, such as lightning strikes, away from network equipment. Proper grounding serves as a pathway for electrical current, similar to how water flows through areas of least resistance, and helps direct harmful electrical surges away from sensitive components. Without proper grounding, there is a risk of the electrical discharge traveling through unprotected conduits, potentially reaching and damaging internal equipment, such as the connected MX.

The MG is made of mostly plastic which helps insulate and not have it targeted by electrostatic discharge (ESD) events. It was tested to IEC 6100-4-2 ESD standards and passed with a rating of up to 30kV of air discharge and up to 30kV of contact discharge.

Electrostatic Discharge (ESD) events, such as lightning strikes, typically target points of least resistance. Since the MG and its patch antenna are primarily made of plastic, these devices are less likely to attract such events. However, we recommend grounding the data and power pathways to protect other connected equipment. This approach is similar to using surge protectors or power conditioners to safeguard MS switches or MX security appliances from power surges. Proper grounding helps mitigate potential damage from electrical events and ensures the longevity of the equipment.

An MG device mounted outdoors on a pole is classified as a Separated or Safety Extra-Low Voltage (SELV) device. From a circuit board perspective, this means the device is designed to proactively isolate certain sections of the board to prevent operational issues. While this design offers protection, it does not guarantee the device will always survive a direct lightning strike or other large electrostatic discharge (ESD) events. However, the MG has been equipped with adequate grounding to effectively handle most ESD events.

Surge Protection

Network Signal Surge Protector Arresters are devices that can be installed inline to protect against excess amperage that may enter the cable during an electrostatic discharge (ESD) event. These devices must be properly grounded to effectively protect against ESD-related damage. We recommend following the vendor's guidelines for correct installation and deployment to ensure optimal protection.

Adding a Network Signal Surge Protector Arrester should not have any negative effects, provided that the cabling standards are properly adhered to throughout the run. When correctly implemented, these devices do not impact throughput between the MG and downstream devices.

Basic Troubleshooting

The following steps can be used for troubleshooting basic connectivity issues with your MG:

- MG devices require a valid and active data plan, so make sure the SIM and data plan are active. SIM size for MG52/52E is nano (4FF).
- Some carriers require specific APNs, usernames/passwords. Ensure the values are correct if required.
- Validate signal quality is sufficient by checking the RSRP and RSRQ values on the Connection tab of the Local Status Page.
- Swap the SIM card to the secondary SIM slot from the primary slot (A new unit will treat SIM slot 1 as primary unless changed via dashboard/LSP)
- Try connecting the MG in Wired WAN Mode and check if it comes online on Dashboard.
- Try a soft reset by pressing the reset button for 1 second to delete a downloaded configuration and reboot the MG. • Try a factory reset by holding the factory reset button for at least 10 seconds.
- Try switching cables, or testing your cables on another device.

> **Note:** If the MG52/E fails to get online or the LED remains RED after all the above steps. Please check the Local Status Page and move your device to an area where the signal conditions are better.

Device Power Issue

- If the device fails to turn on, check the power source to make sure it is adequately supplying power to the MG.
- If there are no LED lights even though there is power at the outlet, check the MG to make sure everything is plugged in properly.
- If the device isn't coming after trying both AC adapter and POE, check that the power options also work on other devices in a similar or matching setup.

If you are still experiencing hardware issues, please contact Cisco Meraki Support by logging in to dashboard and using the **Help > Get Help** option at the top of the page, then opening an email case or calling the Meraki Support center using the contact information on that page.

Confirming if MG52/E is on 5G SA or NSA

MG52 uses a 5G technology known as 5G SA (Standalone). The alternative to this is known as 5G NSA (Non-Standalone). The core difference between these technologies (NSA / SA) is in the control signalling of the Radio Access Network (RAN).

On 5G SA, the control signaling is handled directly on the 5G network. This allows the 5G SA connection to be established purely over 5G without the requirement of a 4G LTE connection.

Via Dashboard:

Within the Uplink tab of the MG status page on the dashboard, the radio status section is displayed. For MG52 this displays both the current 4G and/or 5G radio status including current bands and signal strength.

When the MG has established a 5G SA connection, then the 5G SA radio bands (with or without 5G band Carrier Aggregation (CA)) will be displayed on the cellular uplinks tab on the dashboard . The important thing to note here is that there will be no 4G bands displayed when the MG is connected on the 5G SA network.

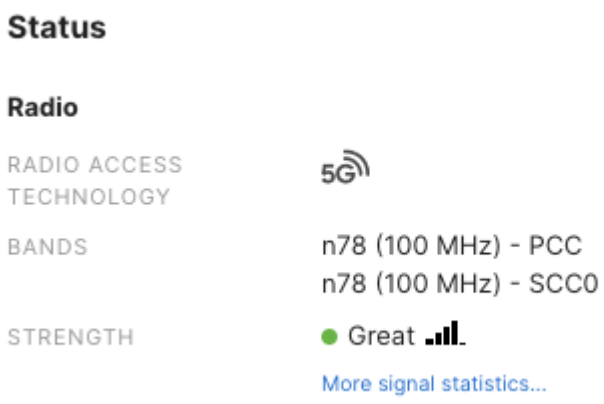

For NSA 5G, the control signalling is anchored to the 4G LTE network and requires a 4G LTE connection to establish before being able to establish the 5G service. Essentially, a 5G NSA connection is required to be built on top of an existing 4G LTE connection.

When the MG has established a 5G NSA connection the radio status of both the 4G LTE and 5G NSA radio will be displayed since the 4G is the base connection.

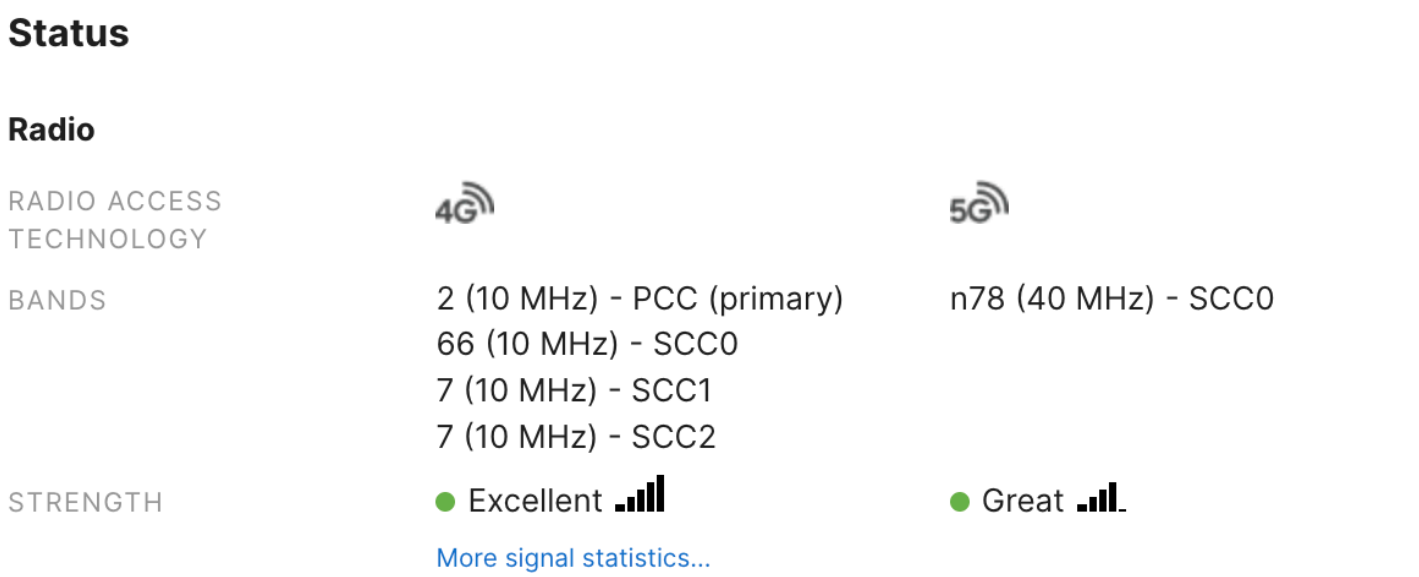

> **Note**: When a 5G connection is not in use, the 5G status will show "**Inactive**":

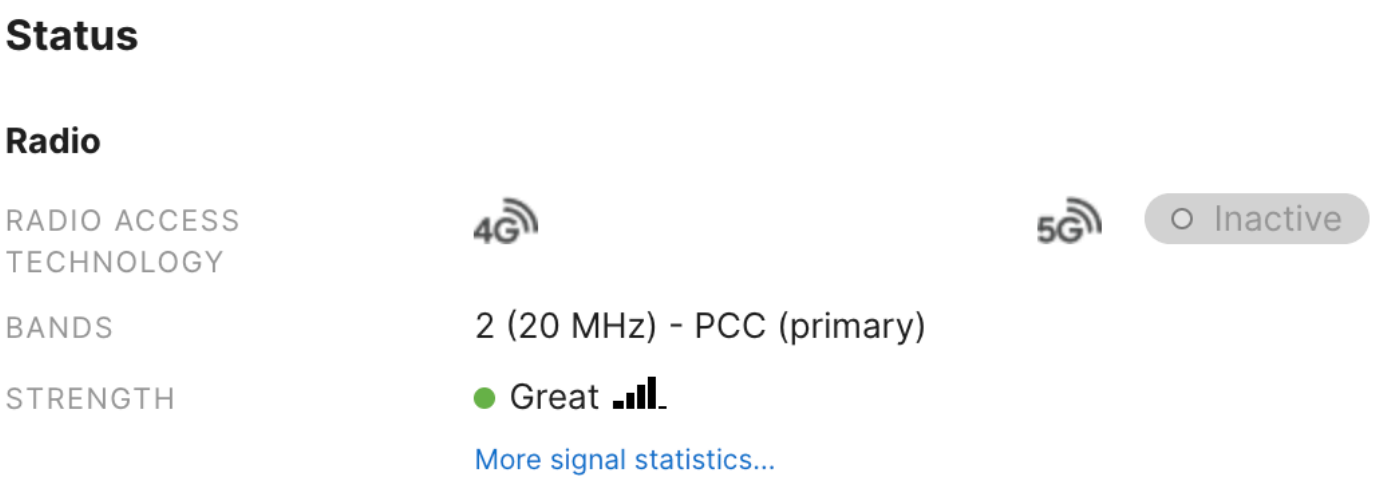

Warranty

MG52/52E Devices Lifetime Applies to MG52 and MG52E hardware MG52/52E Accessories 1 Year Includes mounting kits, antenna, and additional power.

If your Cisco Meraki device fails and the problem cannot be resolved by troubleshooting, contact Meraki Support to address the issue. Once support determines that the device is in a failed state, they can process an RMA and send out a replacement device free of charge. In most circumstances, the RMA will include a pre-paid shipping label so the faulty equipment can be returned.

Additional warranty information can be found on our Warranty Returns page.

Note: In order to initiate a hardware replacement for non-functioning hardware that is under warranty, you must have access to the original packaging the hardware was shipped in. The original hardware packaging includes device serial number and order information, and may be required for return shipping.

Note: Meraki MG52 and MG52E devices have been tested and found to comply with the limits for a Class B digital device, pursuant to part 15 of the FCC rules. These limits are designed to provide reasonable protection against harmful interference in a residential installation. This equipment generates, uses, and can radiate radio frequency energy and, if not installed and used in accordance with the instructions, may cause harmful interference to radio communications. However, there is no guarantee that interference will not occur in a particular installation.

Support and Additional Information

If issues are encountered with device installation or additional help is required, contact Meraki Support by logging in to dashboard.meraki.com and opening a case by visiting the **Help > Get Help** page.

- The equipment is intended for industrial or other commercial activities.
- The equipment is used in areas without exposure to harmful and dangerous production factors, unless otherwise specified in the operational documentation and/or on the equipment labeling.
- The equipment is not for domestic use. The equipment is intended for operation without the constant presence of maintenance personnel.
- The equipment is subject to installation and maintenance by specialists with the appropriate qualifications, sufficient specialized knowledge, and skills.

- Rules and conditions for the sale of equipment are determined by the terms of contracts concluded by Cisco or authorized Cisco partners with equipment buyers.
- Disposal of a technical device at the end of its service life should be carried out in accordance with the requirements of all state regulations and laws.
- Do not throw in the device with household waste. The technical equipment is subject to storage and disposal in accordance with the organization's disposal procedure.
- The equipment should be stored in its original packaging in a room protected from atmospheric precipitation. The permissible temperature and humidity ranges during storage are specified in the Operation (Installation) Manual.
- Transportation of equipment should be carried out in the original packaging in covered vehicles by any means of transport. The temperature and humidity during transportation must comply with the permissible established ranges of temperature and humidity during storage (in the off state) specified in the Operation Manual (Installation).

Note: For additional information on Meraki hardware and for other installation guides, please refer to documentation.meraki.com